Terminals for single cells(can be customized)

T=0.2

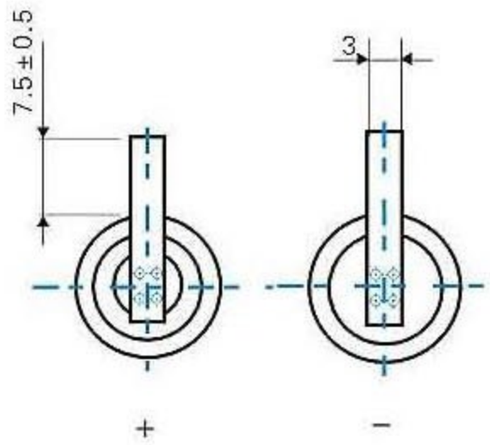

−/T

T=0.2

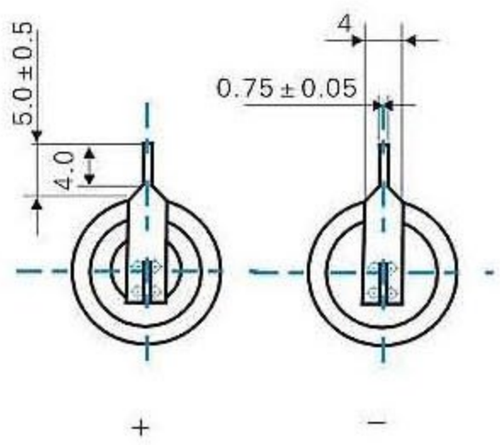

−/2PT

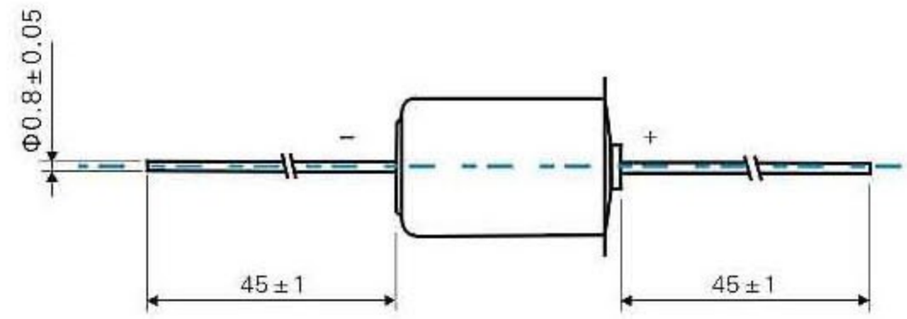

−/P

T=0.2

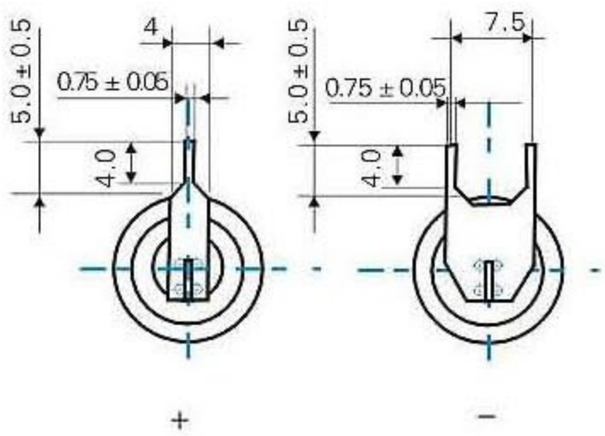

−/3PT

T=0.2

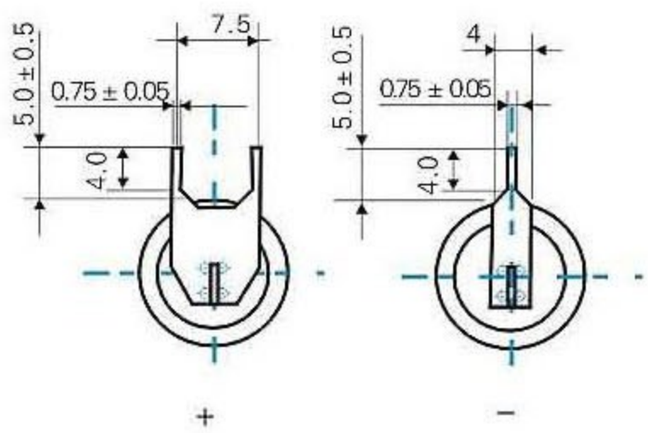

−/3TP

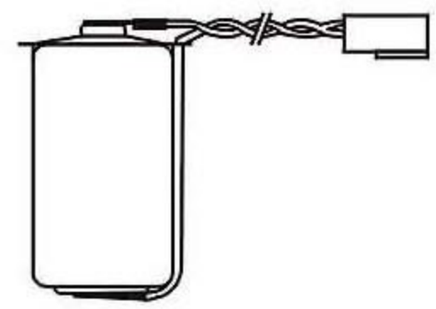

Connector Type1

T=0.2

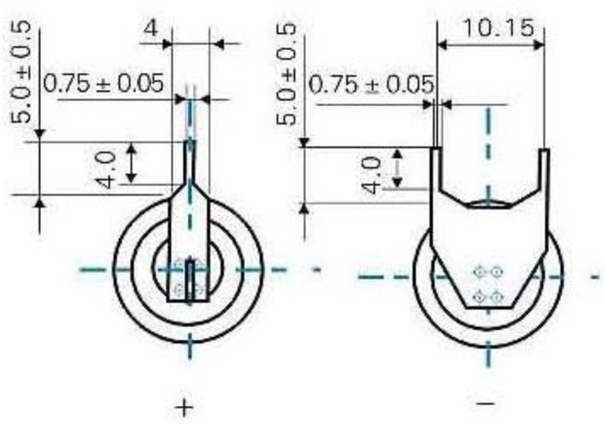

−/3PF

T=0.2

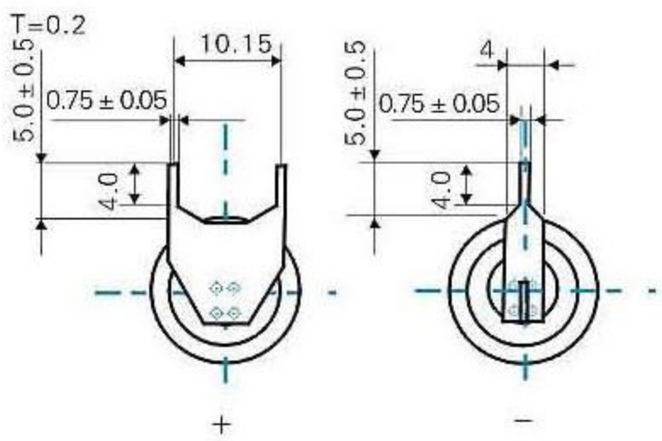

−/3FP

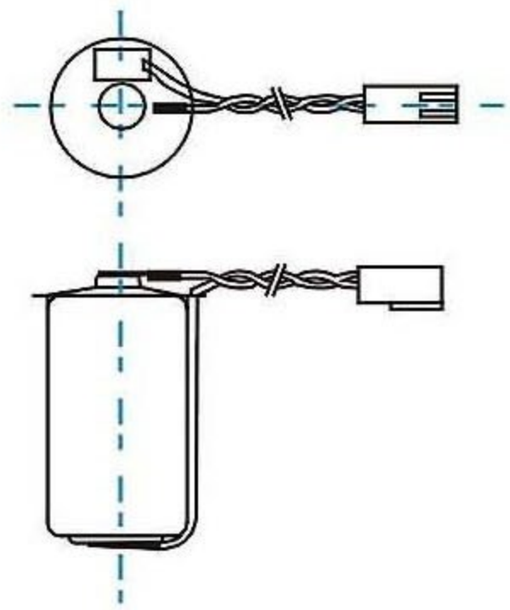

Connector Type2

T=0.2

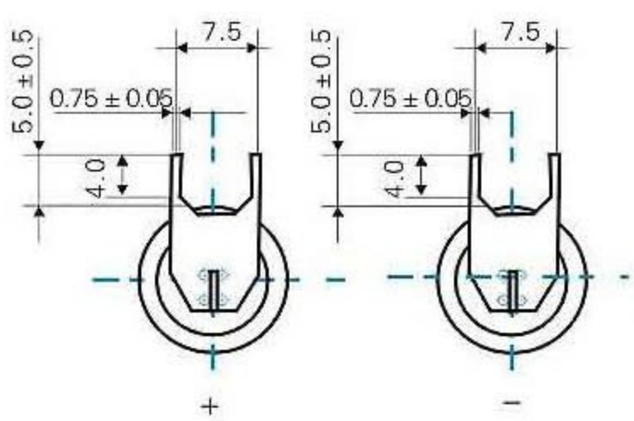

−/4PT

T=0.2

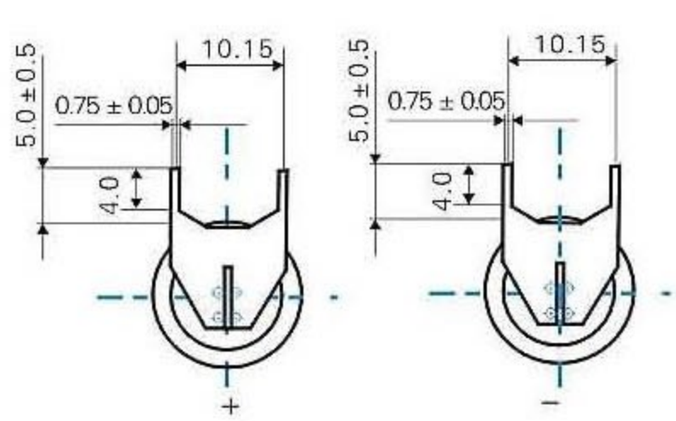

−/4PF

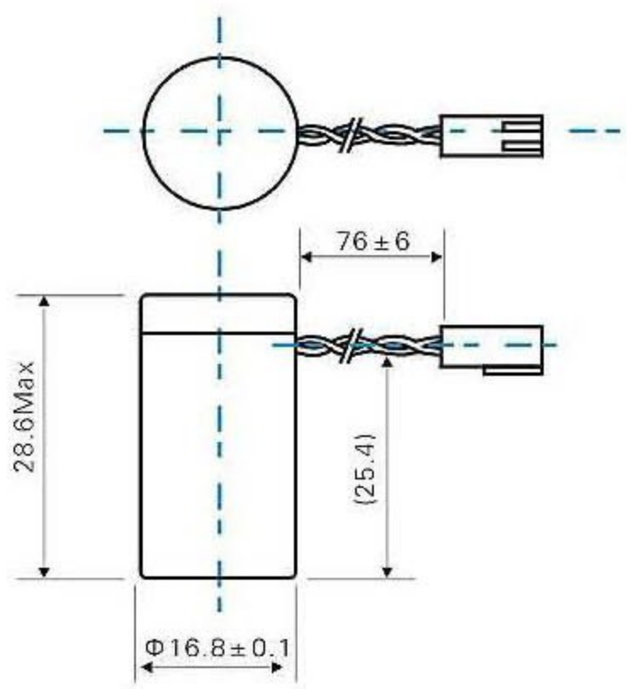

Case Type